Hays Cleveland

BY PREFERRED UTILITIES MFG CORPORATION

HC-09140 Series

Linear Actuator

Installation and Operation

MANUAL

31-35 South Street
Danbury, CT 06810
Phone: 203-743-6741
Fax: 203-798-7313

SDI-HC-09140 rev 9-18-2025

Table of Contents

A.	Description	4
B.	Ordering Information	5
C.	Specifications	6
D.	Installation	8
E.	Wiring	9
F.	Troubleshooting	11

DANGER Safety Warnings

Failure to comply in full with the following safety requirements may result in equipment damage, personal injury or death.

1. Read the entire manual to become familiar with the use and operation of this device.
2. Only qualified personnel should attempt to install, wire, commission, startup, service or operate this device.
3. This device is not suitable for use in an explosive ambient atmosphere.
4. Before working on this device, be sure that you understand the processes affected by this device completely.
5. Before working on this device, be sure that any process affected by this device is secure and safe for servicing.
6. Take appropriate precautions to avoid electric shock when working with this device near water.
7. Exercise caution while wiring or working on this device. Multiple voltage sources may be present: take appropriate precautions to avoid electric shock.
8. RFI (radio frequency interference) can affect adversely the operation of this device and devices that are connected together as a system. Do not use radios near this equipment: examples include, but are not limited to; citizen band radios (CB), walkie-talkies, transceivers, and amateur radios (HAM).

A. DESCRIPTION

The Series HC-9140 Linear Actuators offer long life, reliable operation, safety, and easy maintenance. Specifically designed for compactness and flexibility, HC-9140 actuators accept a switched line voltage input from a controller with bi-directional relay outputs to position a final control element such as a damper, control valve, louver, stoker lever, variable speed transmission, or any similar device over a 6-inch range of travel. There is no mechanical brake assembly: The inherent braking-action of the synchronous stepping motor prevents overtravel without the wear and stress associated with friction or “DC” braking.

Switched 120 v AC line voltage input controls a reversible motor in finite increments to drive an acme screw through a nonslip timing belt drive and pulley system. The screw drives through a travel nut and bearing arrangement to extend or retract the drive tube. The nut and screw assembly self-locks in the case of power failure, in order to maintain final drive tube position. End switches shut off power to the motor when the unit reaches either the inward or the outward travel extreme.

All applications use the full six-inch travel of the drive arm. Linear or nonlinear movement of the final control element, as well as its total range of travel, is controlled by adjustment of the linkage connecting the actuator’s drive arm to the operating lever of the final control element.

As standard features, “retracted” and “extended” auxiliary switches are provided to operate lights or other ancillary equipment as required for customer use. In addition, Series 9140 Linear Actuator models are equipped with an adjustable start position switch.

B. ORDERING INFORMATION

HC - 0914A – B – C – D - E

A. Nominal Stroke Time / Thrust Range:

A=1 30 seconds/75 lbs. thrust (18.75 ft. lbs.)
A=2 60 seconds/150 lbs. thrust (37.5 ft. lbs.)
A=3 120 seconds/300 lbs. thrust (75 ft. lbs.) **No Longer Available**

B. Position Feedback Potentiometer

B=0 None
B=1 1000Ω
B=2 4000Ω **No Longer Available**
B=3 135Ω

C. Custom Positioning Options

C=0 None
C=1 Adjustable Start Position Switch
C=2 Isolated Auxiliary End of Travel Switch
C=x Covers all options above **Only Available Option**

D. Custom Housing Options

D=0 None
D=1 Handwheel
D=3 NEMA 3 Rated **No Longer Available**

E. Power Requirements

E=1 120Vac 50/60 Hz

Linkage Accessories:

HC-11372	Damper Lever Arm
HC-26908	Extension Drive Rod & Clevis Assembly
HC-32032	Linkage Kit

C. SPECIFICATIONS

Mechanical:	17.50L" by 7.50" W by 5.90" H
Weight:	21lbs
Operating Temperature:	0°F to +140°F (-18°C to +60°C)
Electrical:	Voltage: 120 VAC +10% - 15%, 50/60Hz Power consumption: 28VA
Auxiliary Switches:	10A, 250VAC

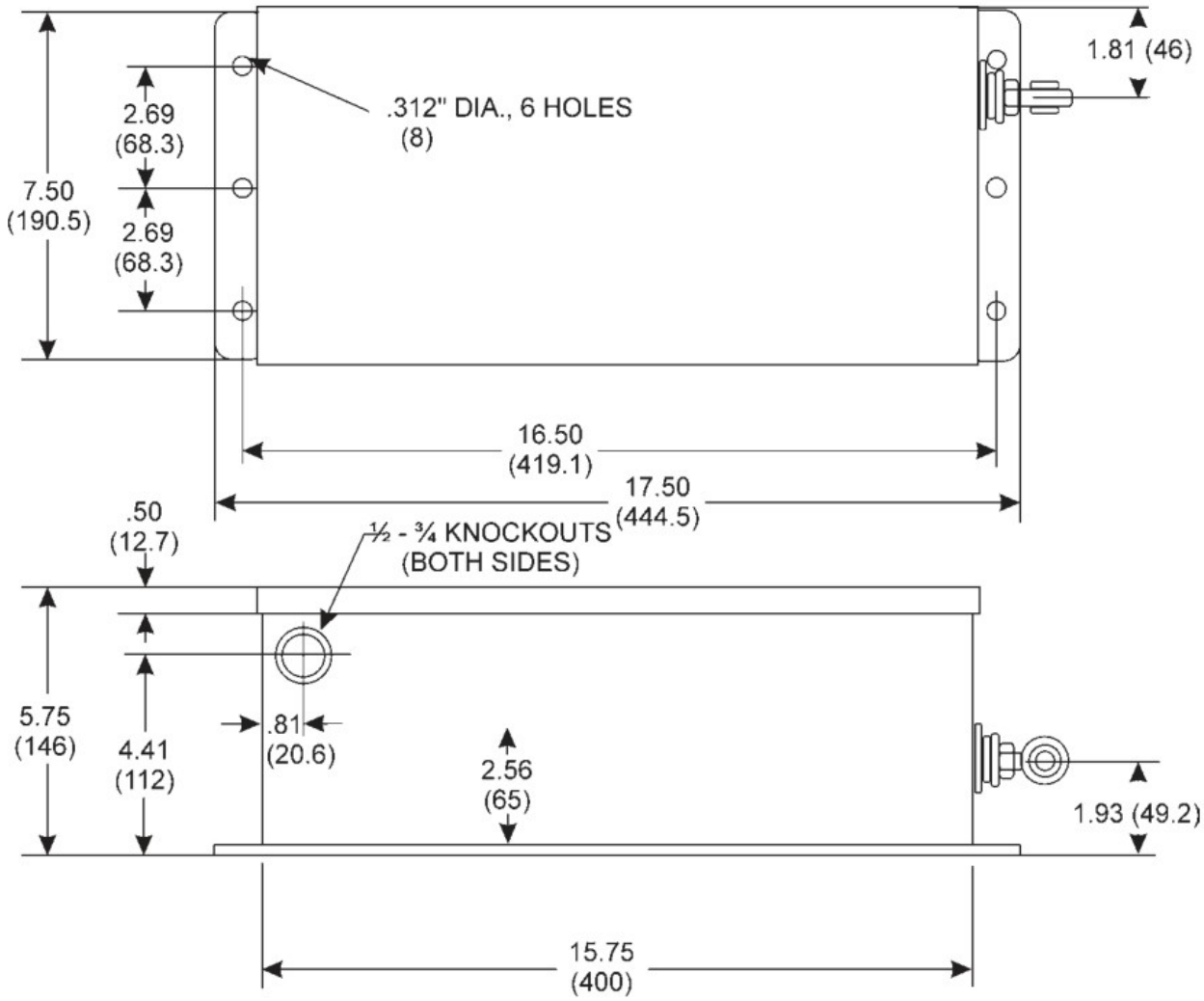

APPROXIMATE DEGREES OF DAMPER OPENING FOR EACH OF SIX HOLES IN DAMPER LEVER ARM FOR 6" STROKE OF THRUST ARM.

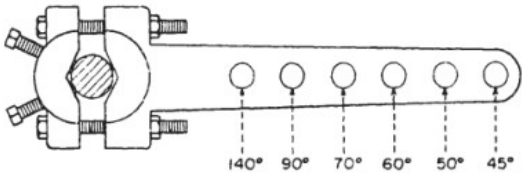

ACTUAL OPENING DEPENDS ON ANGLE OF THRUST AND DAMPER SHAFT DIAMETER.

DAMPER TRAVEL ADJUSTMENTS

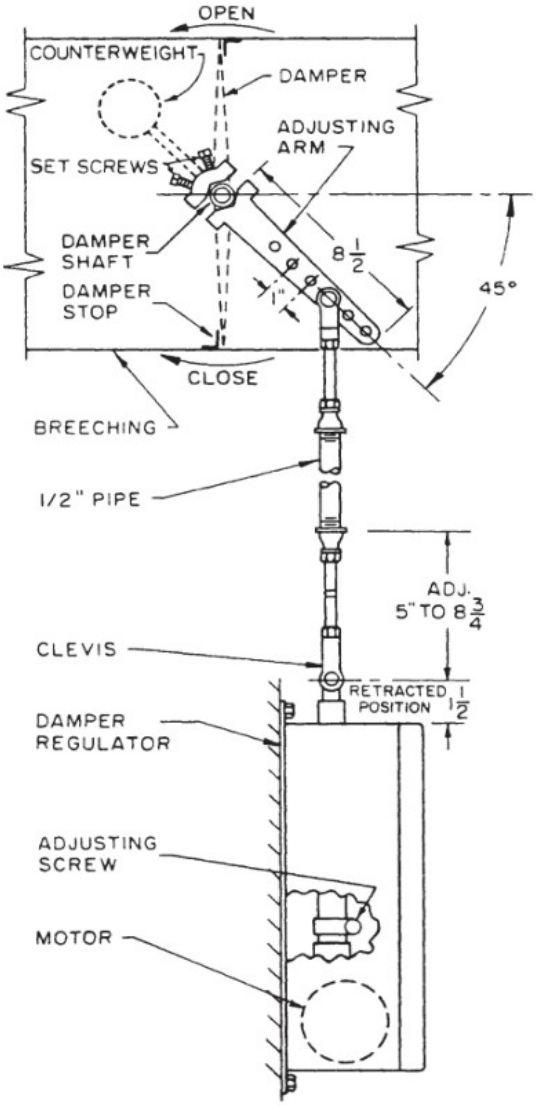

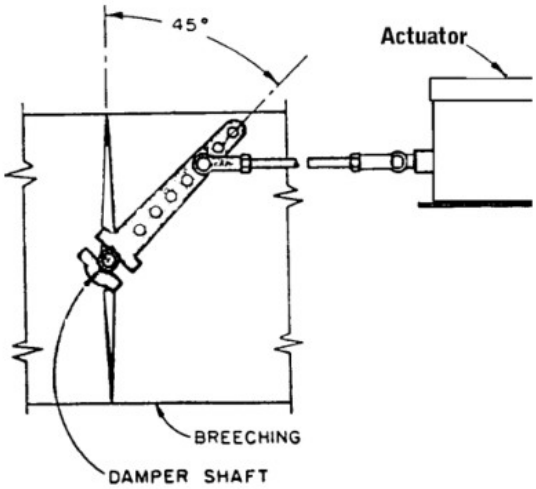

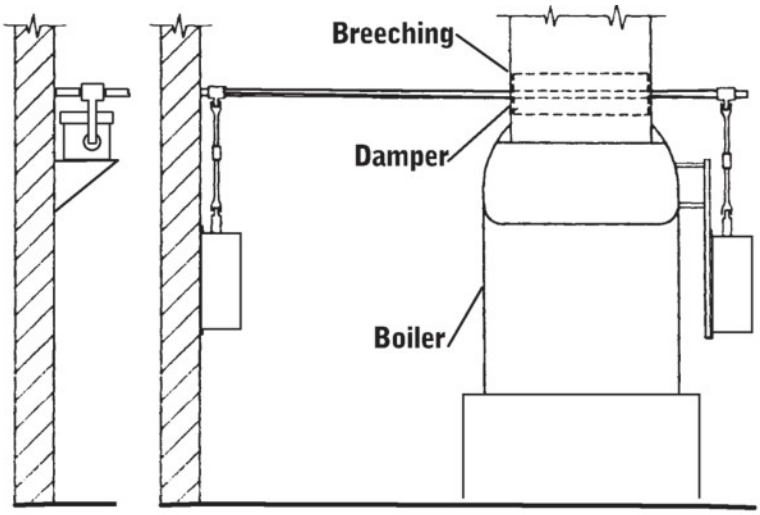

Suggested Actuator Locations

D. Installation

Mount the actuator on a flat, rigid surface that allows convenient linkage to the damper. We recommend a location where ambient temperatures are normal. the actuator should be protected from radiant or conducted heat.

Linkage for connecting the actuator to the outlet damper consists of the following: adjustable lever arm, two clevis assemblies, and a length of ½" pipe (furnished by the customer). For best results, the damper should be tight fitting, but with enough clearance to move freely in the breeching. on oil or gas-fired boilers, a damper seal-stop is recommended to ensure full closure when the burner shuts off. Where a standing pilot is used, the damper should be kept slightly open during the “off” periods.

A length of ½" pipe (supplied by others) is required to complete the linkage. It should never be shorter than 12" in length. For the most effective thrust, make the linkage as long as practical and position the actuator so that movement of the thrust bar is as aligned as accurately as possible with the movement of the linkage.

Actuator & Linkage Installation
1. Place the damper in the fully closed position
2. Attach the lever arm to the damper shaft at a 45° angle to the damper
3. Insert a bronze bushing in one of the holes in the lever arm. For full 6" travel, use the third hole from the rounded end
4. Attach one clevis to the lever arm with the pin through the bushing.
5. Attach the other clevis to the actuator, with the pin through the eye in the thrust bar. the thrust bar should be fully retracted if the damper opens on the outward stroke, and fully extended if the damper opens on the inward stroke.
6. Adjust the clevis assembly until about 1" of the threaded rod extends through the adaptors.
7. Install the proper length of ½" pipe between the adaptors to complete the linkage.
8. Before operating the damper electrically with the actuator, disconnect the clevis at the actuator end by removing the pin. operate the actuator electrically through the full cycle of travel while holding the clevis in simulated connected position and moving it to operate the damper manually. Make sure that the linkage moves freely, without restriction or binding, and that the damper moves to the maximum open and closed positions required by the particular application.
9. reconnect the linkage and operate the damper electrically. operating adjustments to the actuator can be made at this time, if necessary.

E. Wiring

All system wiring must be run in accordance with the National Electrical Code and all local code requirements.

- Always remove all power to the system before wiring.
- This product is designed to work in a variety of applications and conditions; however, some applications may not be applicable due to the presence of high electrical noise, lack of adequate ground connections, floating neutrals or other known or unknown conditions. It is therefore important to ensure proper system environment before installing these devices.
- All wires near hot surfaces should be rated for 90°C (195°F) or at least 25°C (50°F) higher than the surface temperature.
- The most effective ground is to run the ground wire in the same raceway as the hot and neutral from the main distribution service panel (not intermediate sub-panels) to the damper controller.
- The ground path needs to be low impedance (less than 1 ohm) to the equipment frame, which in turn needs low impedance to earth ground. For a ground path to be low impedance at RF frequencies, the connection must be made with minimum length conductors having maximum surface areas.
- All connections should be free of nonconductive coatings and protected against rust.
- Utilizing conduit as a means of providing a ground must be avoided.

Wires must be 14AWG minimum with temperature rating of at least 90C. See the following wiring diagram for external connections.

Auxiliary Proof of Extend and Retract Dry Contacts

The auxiliary extend/retracted position dry contacts are accessed by removing the flexible plastic switch cover. The switches closest to the actuator wall are factory wired and should not be adjusted. The switches further from the wall are the auxiliary dray contacts. These are shipped with no factory wiring connected.

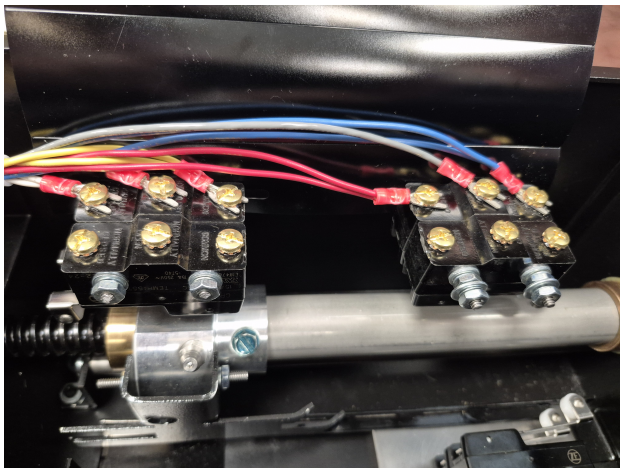

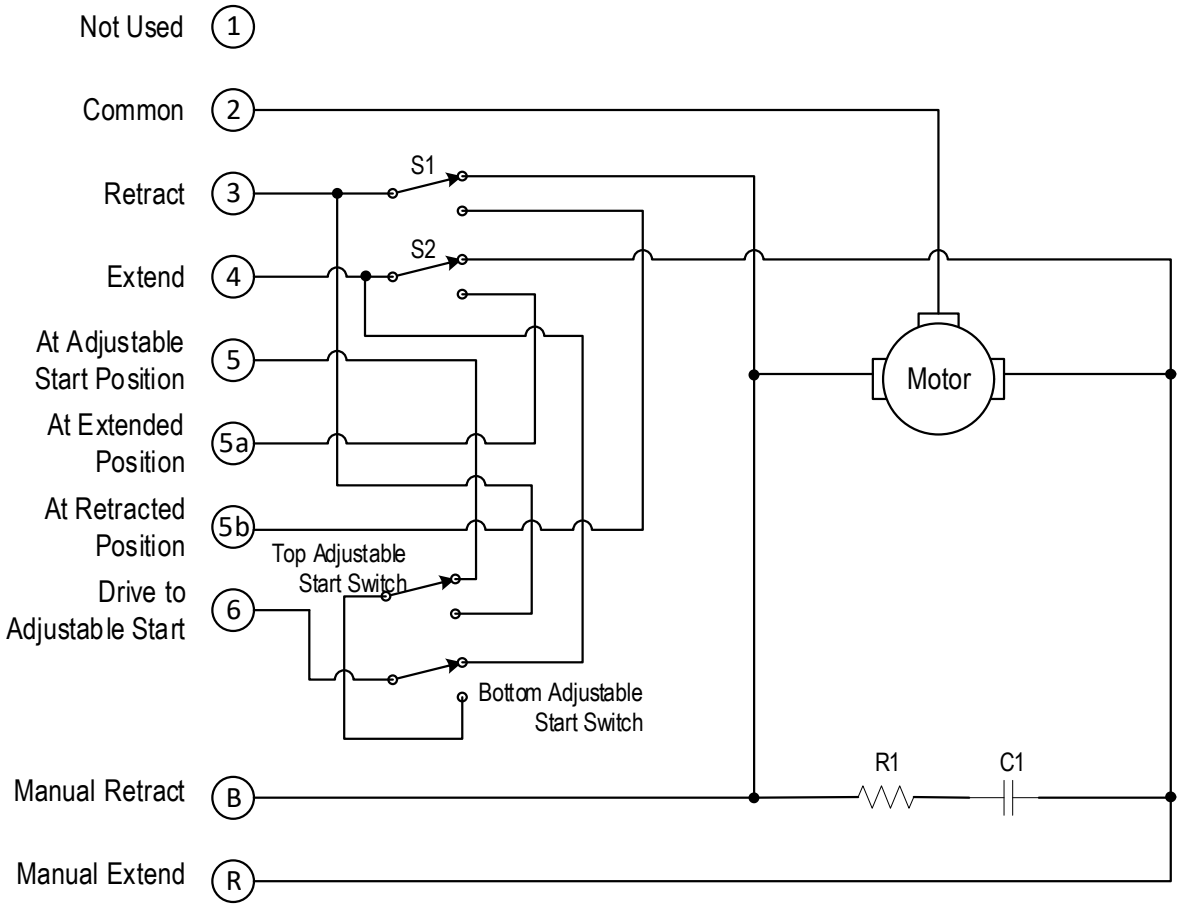

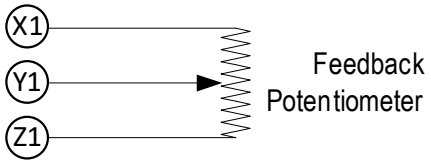

Notes:

1. When outward stroke opens the damper, jump terminals 5 and 5a
2. When inward stroke opens the damper, jump terminals 5 and 5b
3. To reverse operation, interchange external wires to terminals 3 & 4, and (if used) X1 & Z1

F. Troubleshooting

Hunting may occur when the damper is modulating around a nearly closed damper position. In this situation, small movements of the actuator are extremely effective. correct the problem by moving the clevis at its lever arm end to a hole farther from the shaft. this means a sacrifice of wide-open damper: thus, to complete the procedure, readjust the linkage for the closed damper position.

Problem	Possible Source	Remedy
Drive arm hunts continuously	Linkage is connected too close to damper shaft	Lengthen the damper lever arm
	Faulty control response	Check the operation of the draft controller, per instructions shipped with it
	Damper modulates at partially closed position	See adjustment tips above in this manual
Motor Overheats	Incorrect voltage	Check voltage
	Incorrect Wiring	See wiring instructions with draft controller
	High ambient temperature	Check location and spacing. Shield the unit from reflected heat
	Overloading	Ease load or counterbalance
	Binding damper or linkage	Free damper or linkage
	Hunting	Correct hunting as discussed above
Actuator fails to operate	Faulty control response	Check voltage
	Faulty limit switches	Check switches, replace if necessary
	Broken belt	Replace in field
	Motor failure	Replace in field